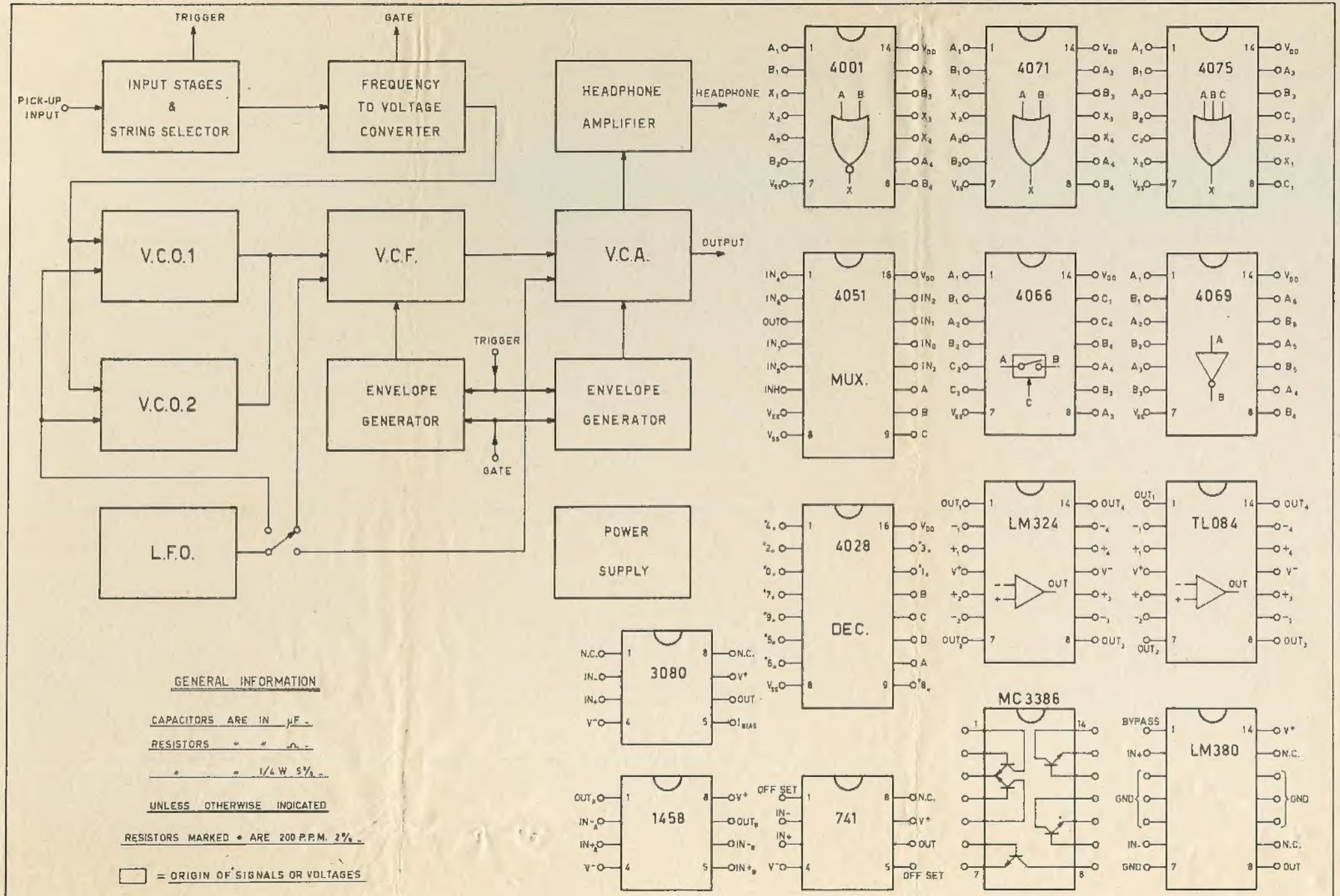
TRIGGER
GATE
PICK-UP INPUT
INPUT STAGES & STRING SELECTOR
FREQUENCY TO VOLTAGE CONVERTER
HEADPHONE AMPLIFIER
HEADPHONE
V.C.O.1
V.C.O.2
V.C.F.
V.C.A.
OUTPUT
ENVELOPE GENERATOR
ENVELOPE GENERATOR
TRIGGER
GATE
L.F.O.
POWER SUPPLY
4001
4071
4075
4051
MUX.
4066
4069
4028
DEC.
LM324
TL084
3080
1458
741
MC 3386
LM380
GENERAL INFORMATION
CAPACITORS ARE IN µF.
RESISTORS " " Ω.
" " 1/4 W 5%.
UNLESS OTHERWISE INDICATED
RESISTORS MARKED • ARE 200 P.P.M. 2%.
= ORIGIN OF SIGNALS OR VOLTAGES
CODICE 393.183
JEN ELETTRONICA S.p.A.
BLOCK DIAGRAM & I.C. CONNECTIONS
DWG. 1

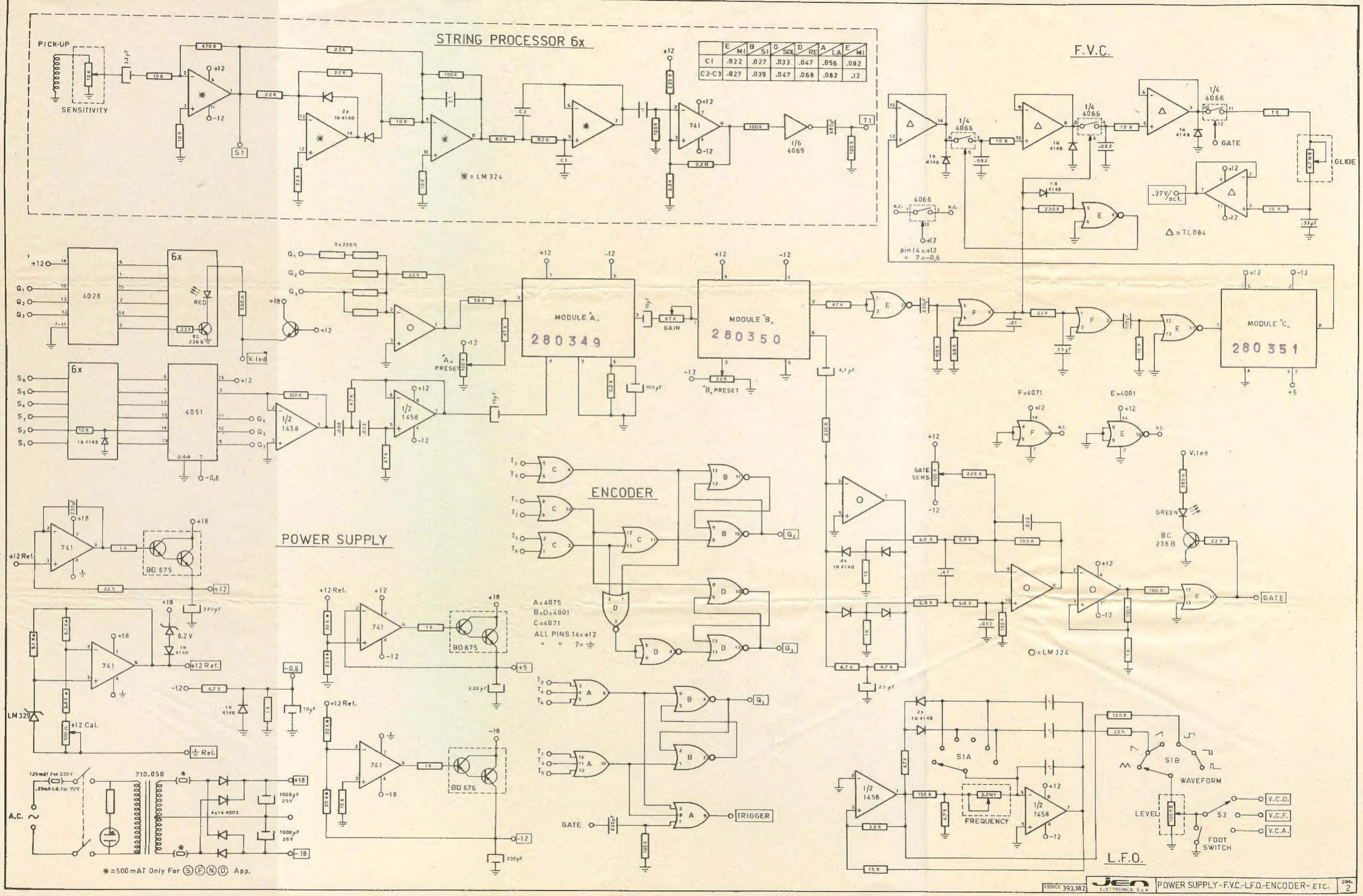
STRING PROCESSOR 6x
PICK-UP
SENSITIVITY
* = LM 324
F.V.C.
GATE
GLIDE
.37V/oct.
Δ = TL084
MODULE "A"
280349
MODULE "B"
280350
MODULE "C"
280351
GAIN
"A" PRESET
"B" PRESET
F=4071
E=4001
GATE SENS.
GREEN
O = LM 324
ENCODER
A=4075
B=D=4001
C=4071
ALL PINS 14=+12
" " 7=⏚
TRIGGER
GATE
POWER SUPPLY
+12 Cal.
+12 Ref.
⏚ Ref.
A.C.
710.050
4x1N 4003
* = 500 mAT Only For (S)(F)(N)(D) App.
S1A
S1B
WAVEFORM
FREQUENCY
LEVEL
FOOT SWITCH
V.C.O.
V.C.F.
V.C.A.
L.F.O.
CODICE 393.182
JEN ELETTRONICA S.a.r.
POWER SUPPLY-F.V.C.-L.F.O.-ENCODER- ETC.
DWG. 2

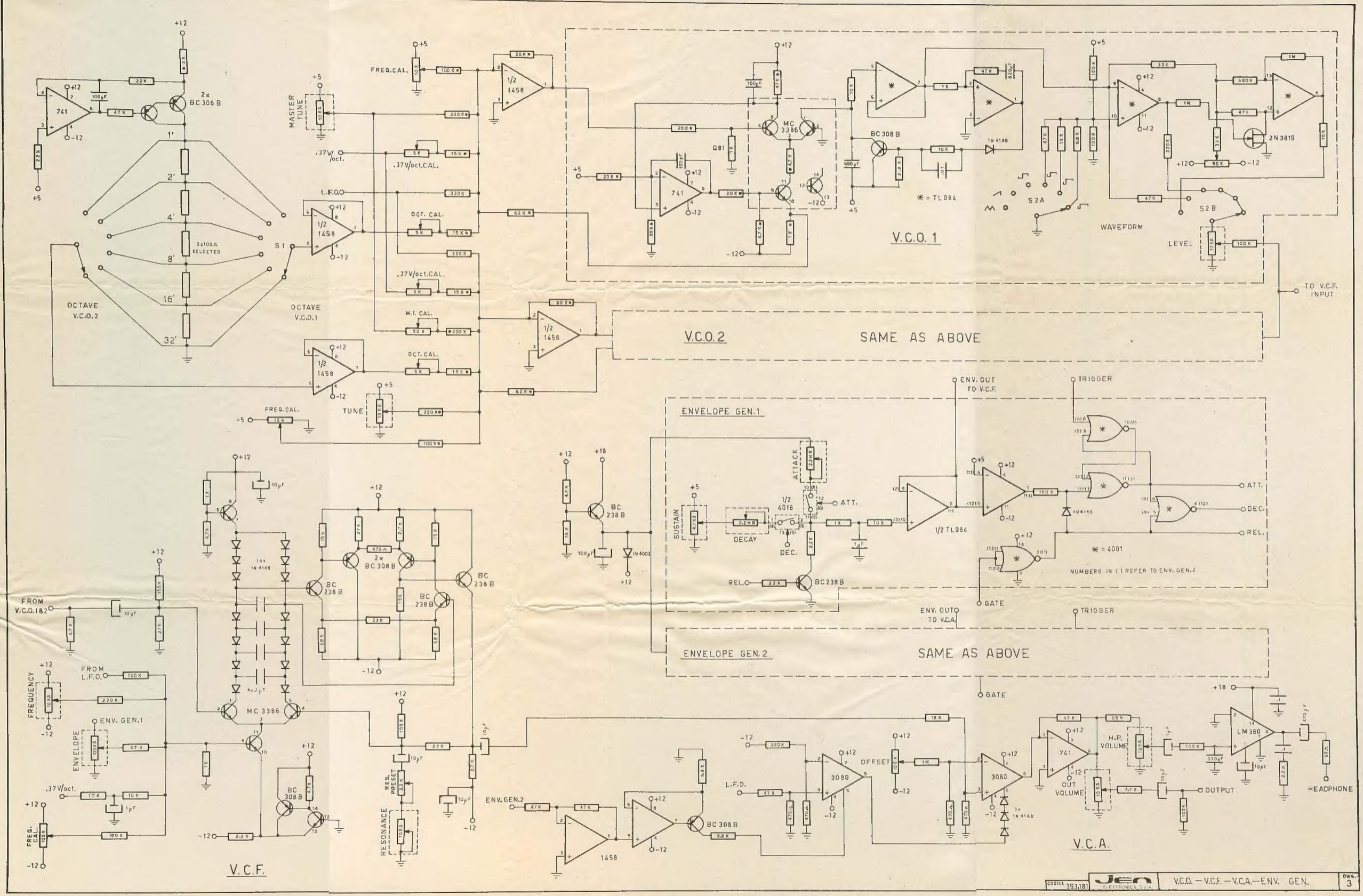
V.C.O. 1
V.C.O. 2
SAME AS ABOVE
OCTAVE V.C.O. 2
OCTAVE V.C.O. 1
MASTER TUNE
FREQ. CAL.
.37V/oct.
.37V/oct. CAL.
L.F.O.
OCT. CAL.
M.T. CAL.
TUNE
S1
S2A
S2B
WAVEFORM
LEVEL
TO V.C.F. INPUT
2x BC 308 B
MC 3386
741
1/2 1458
BC 308 B
BC 238 B
2N 3819
TL 084
* = TL 084
ENVELOPE GEN. 1
ENVELOPE GEN. 2
ENV. OUT TO V.C.F.
TRIGGER
ATTACK
SUSTAIN
DECAY
DEC.
ATT.
REL.
GATE
ENV. OUT TO V.C.A.
1/2 4016
1/2 TL 084
* = 4001
NUMBERS IN ( ) REFER TO ENV. GEN. 2
FROM V.C.O. 1 & 2
FROM L.F.O.
FREQUENCY
ENVELOPE
ENV. GEN. 1
ENV. GEN. 2
FREQ. CAL.
RESONANCE
RES. PRESET
14x 1N 4148
MC 3386
V.C.F.
OFFSET
3080
H.P. VOLUME
OUT VOLUME
OUTPUT
HEADPHONE
LM 380
V.C.A.
CODICE 393.181
JEN ELETTRONICA S.p.A.
V.C.O. – V.C.F. – V.C.A. – ENV. GEN.
DWG. 3